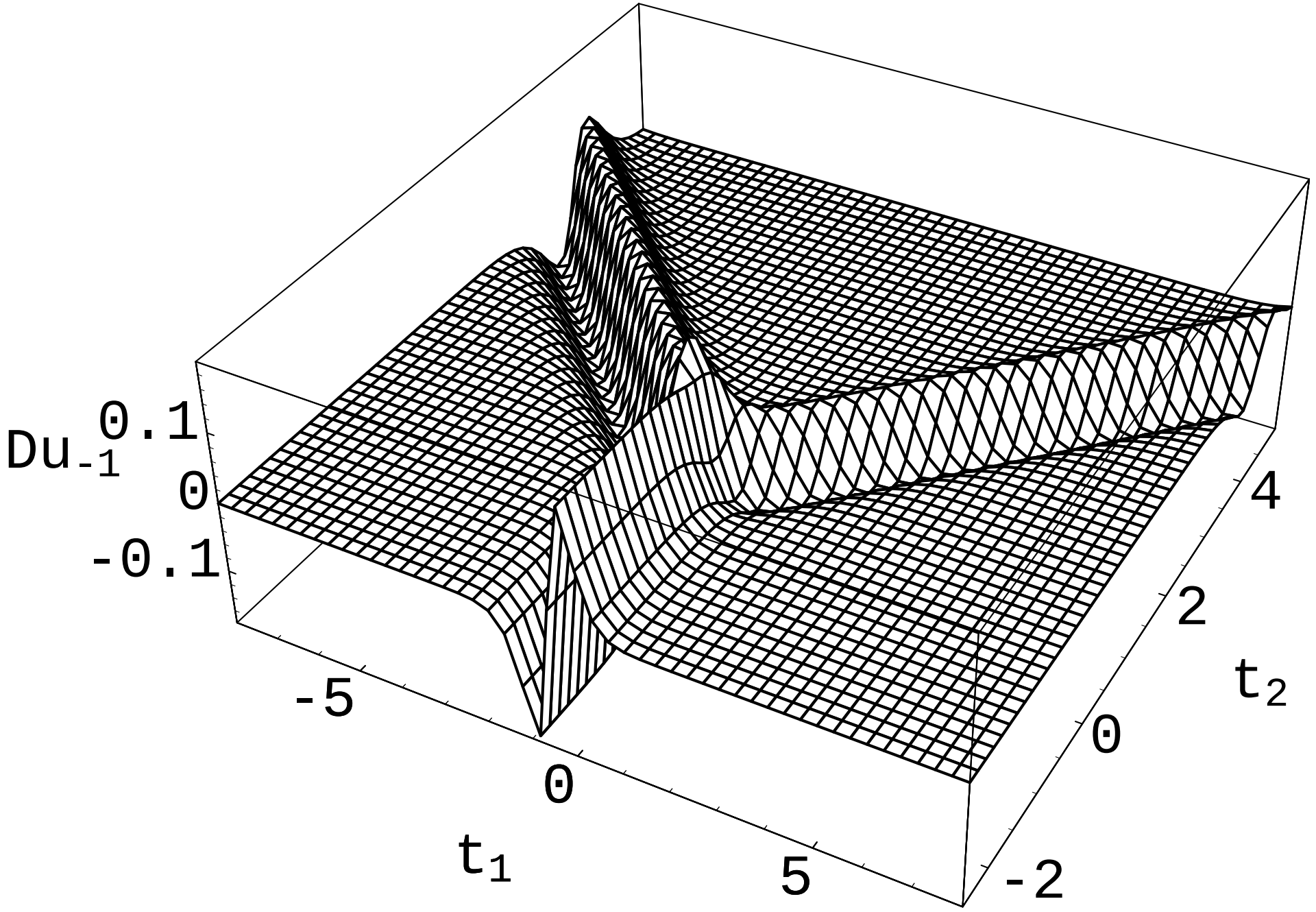
0.1
Du-1
0
-0.1
-5
0
t1
5
-2
0
2
4
t2